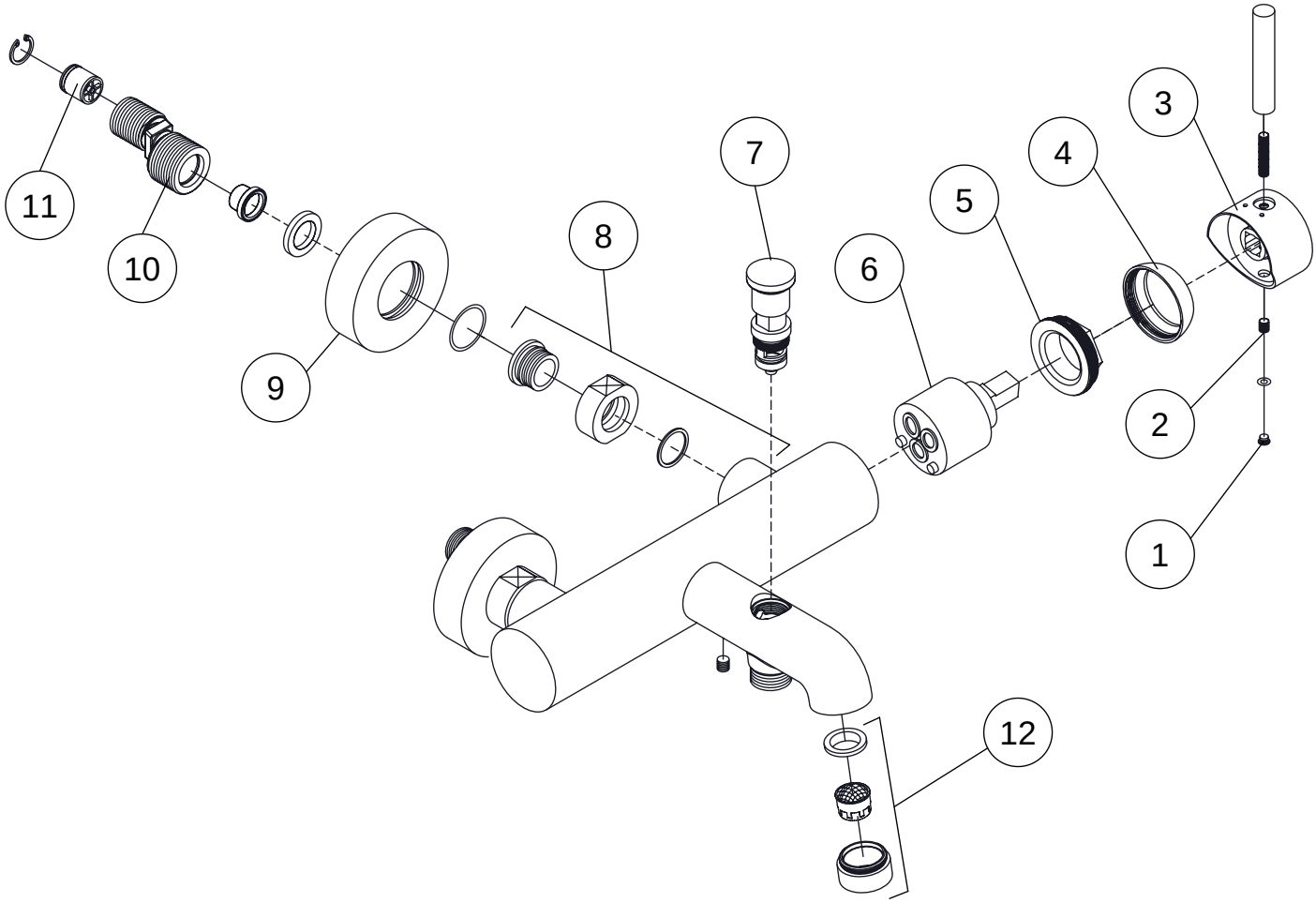

	PartNo	DE	EN
1	099 4107 BG	Abdeckkappe zum Hebel, Brushed Gold	cover cap for lever, brusched gold
2	099 1105	Madenschraube	set screw of handle
3	099 9913 BG	EHM -Armaturhebel mit Logo komplett, Brushed Gold	single lever with logo complete, brushed gold
4	099 8013 BG	Kugelkappe, Brushed Gold	sleeve for hexagon of cartridge, brushed gold
5	099 8012	¦berwurfmutter Kartuschebefestigung (40mm)	hexagonnut to fix cartridge
6	099 9020 1	Keramik-Kartusche "Kerox" 40 mm	ceramic cartridge "Kerox" 40 mm
7	099 9097 BG	Umsteller, Brushed Gold	diverter, brushed gold
8		¦berwurfmutterkomponenten ¦3/4", Brushed Gold	hexagonnut spare parts components ¦3/4", brush.gold
9	099 9877 BG	Rosette Ï 68 mm (Paar), Brushed Gold	rosette Ï 68mm (pair), brushed gold
10	099 9891	S-Anschluss (Paar) inkl. R¿ckflusverhinderer	S-connection (pair) incl. back flow preventer
11	099 9161	R¿ckflussverhinderer Ï 15mm	back flow preventer Ï 15mm
12	099 9122 BG	Luftsprudler komplett mit H¿lse, Brushed Gold	aerator complete with sleeve, brushed gold

100 1100 BG

06.02.2023

STEINBERG