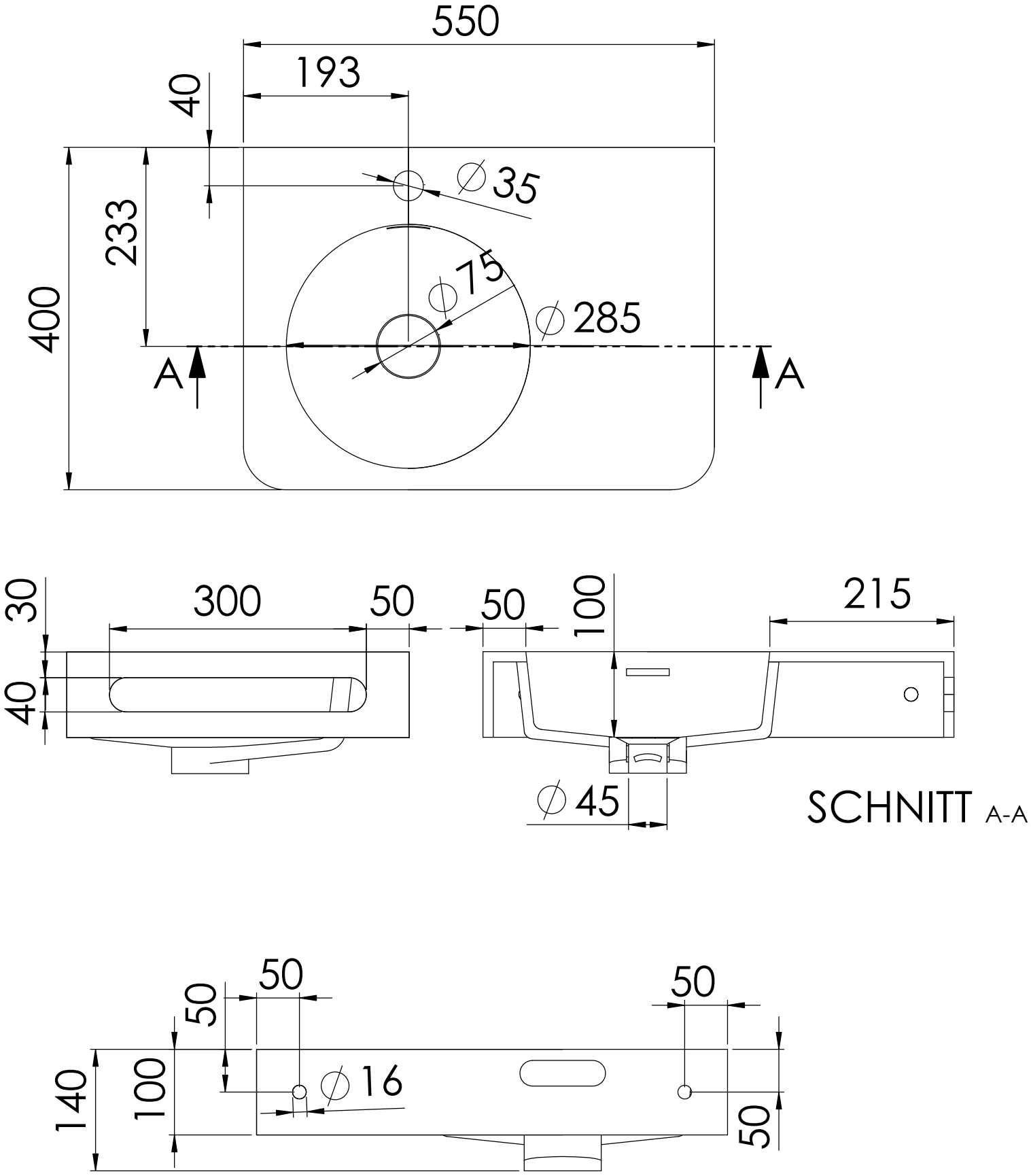

Toleranz / tolerance:
30~120mm= +/-4mm
120~300mm= +/-8mm

449 7115 W

STEINBERG